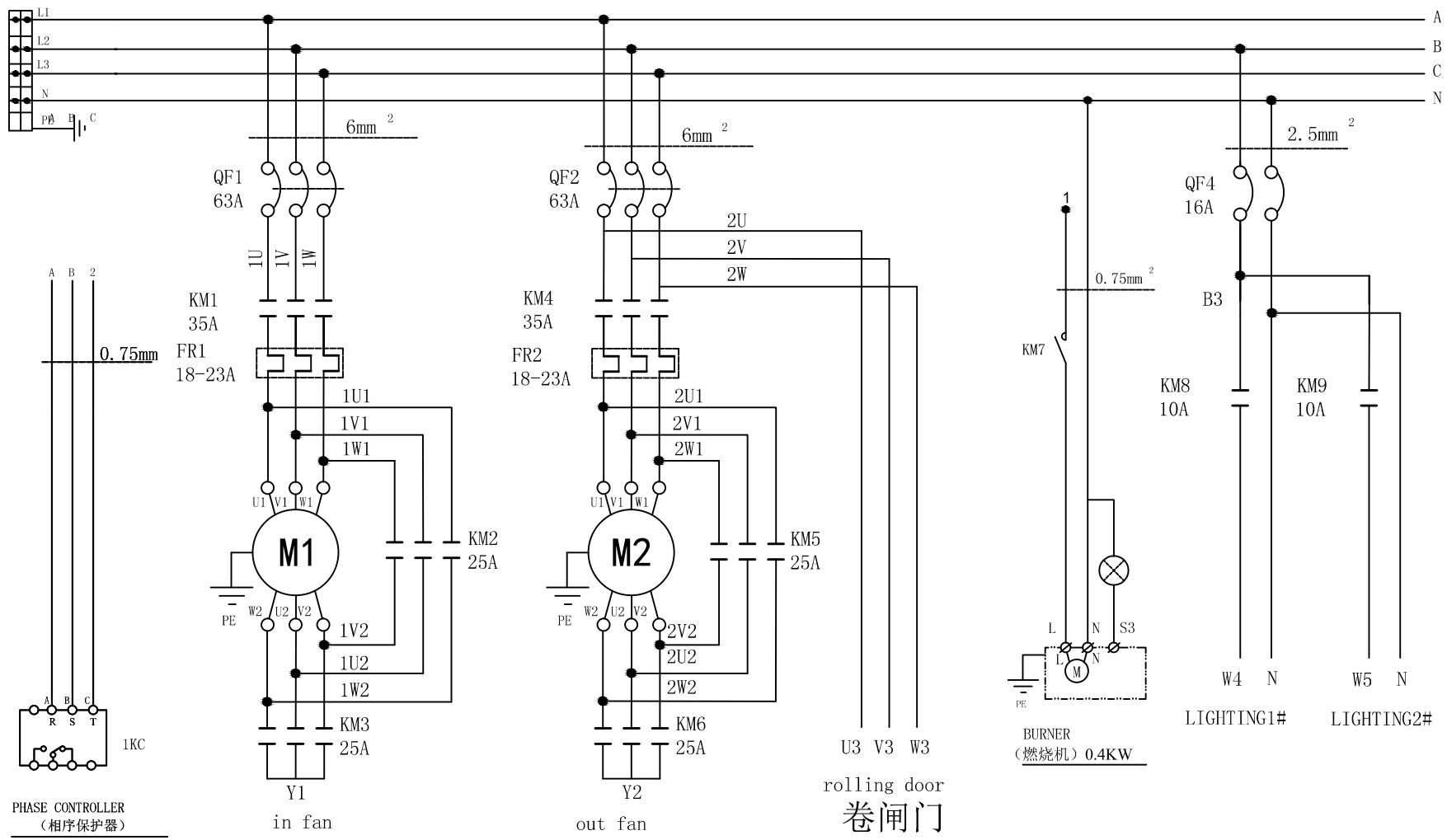

Motor1 (送风机)							Motor2 (引风机)							rolling door (卷闸门电源)					Throttle (风门)		Limit thermostat (限温器)		Burner (燃烧机)						Lighting (上排灯)			Lighting (下排灯)		
1U1	1V1	1W1	1U2	1V2	1W2	PE	2U1	2V1	2W1	2U2	2V2	2W2	PE	U3	V3	W3	N	PE	34	N	10	35	L	N	S3	T6	T8	PE	W4	N	PE	W5	N	PE

		2016Year_4month	GUANGLI
			1 / 3

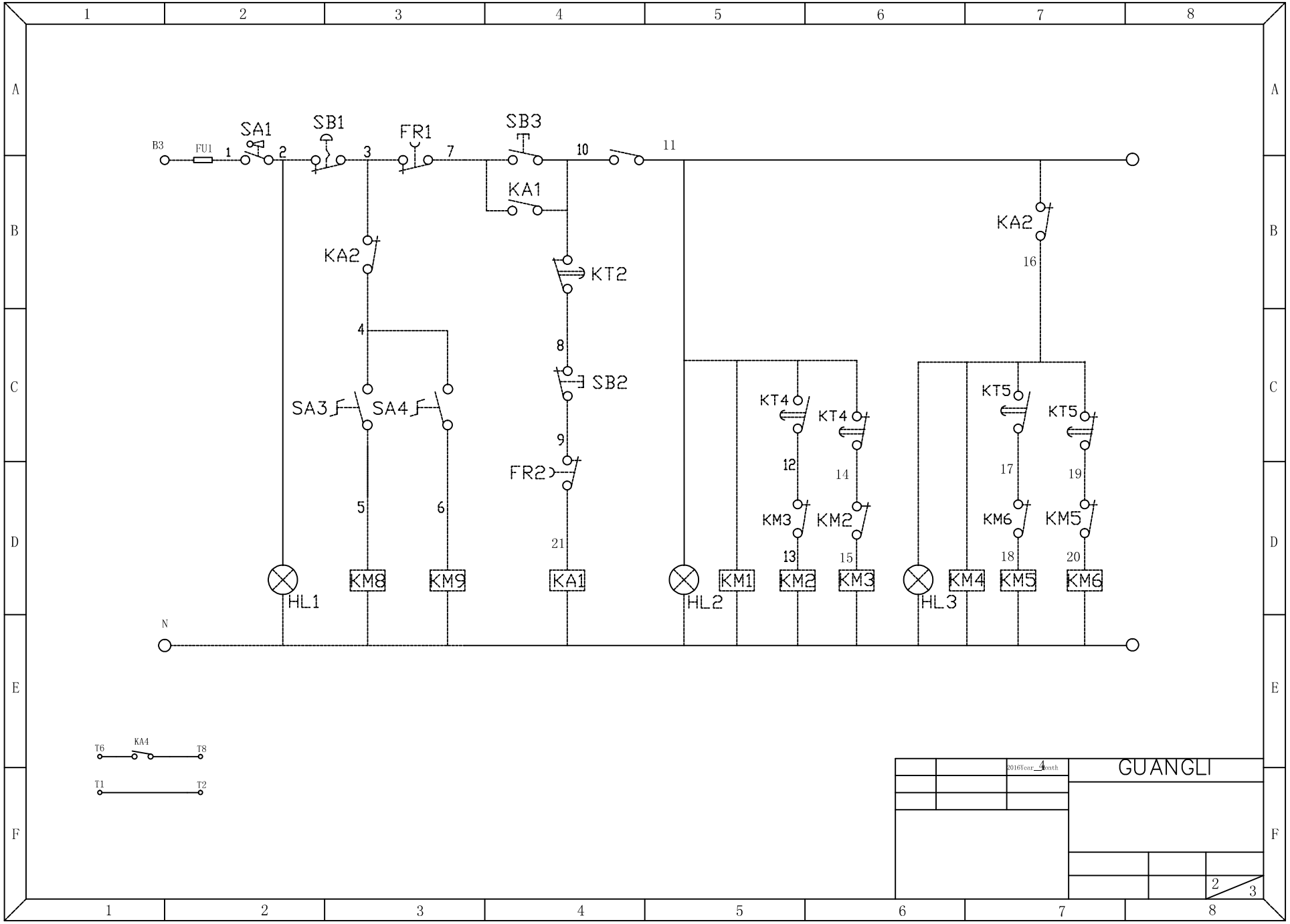
B3
FU1
SA1
SB1
FR1
SB3
KA1
KA2
KT2
SB2
FR2
SA3
SA4
KM8
KM9
HL1
HL2
KM1
KT4
KM2
KM3
HL3
KM4
KT5
KM5
KM6
N
T6
KA4
T8
T1
T2
GUANGLI
2016Year_4month
2
3

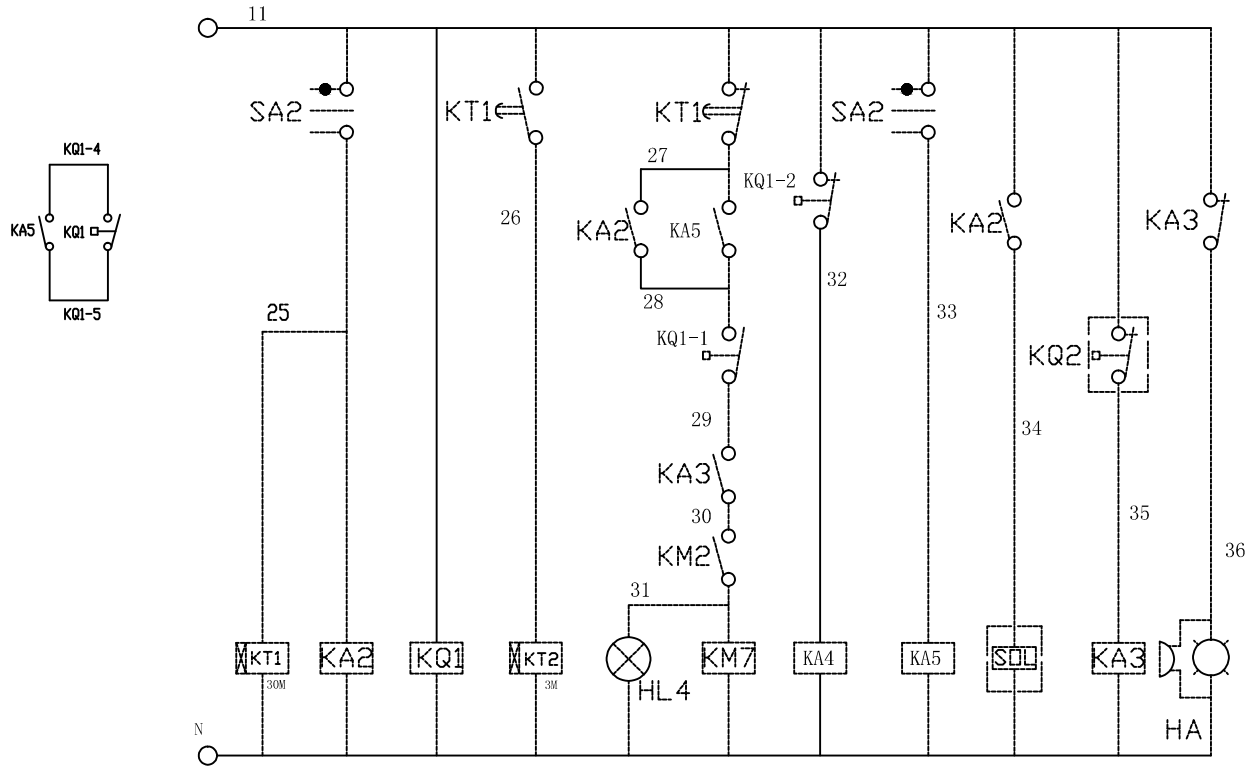

		2016Year_4Month	GUANGLI
			3 / 3